CAMERON
A Schlumberger Company

JISKOOT ByScoop

Sample extraction probe

APPLICATIONS

- Sampling and analysis fast-loop operations

ADVANTAGES

- Integrated return that eliminates need for separate entry and exit points on the line
- Streamlined entry profile that prevents preferential bias caused by specific gravity variation in mixed fluids
- Large-bore sample bypass
- Fixed or withdrawable mounting designs
- Available hydraulic extractors

The JISKOOT ByScoop* sample extraction probe is specifically designed to ensure optimal sample representativity for cell samplers, water monitors, densitometers, and online analyzers. For the bypass slipstream to be truly representative, the sample intake must be located in the center half of a well-mixed cross section of the pipe flow and be designed to prevent any biasing of the slipstream properties.

JISKOOT ByScoop sample extraction probe.

The Cameron philosophy of cost reduction through high-quality engineering solutions is evident in the JISKOOT ByScoop probe's integrated return, which eliminates the traditional need for separate entry and exit points on the line. It also reduces hot tap size requirements through the use of an internally beveled, knife-edged, swan-neck takeoff, offset to ensure a streamline profile to the entry. This prevents any preferential bias caused by mixed fluids having different specific gravities.

The JISKOOT ByScoop probe has a substantial stem to allow insertion into the center half of the pipeline without bending or vortex shedding problems. The sample entry size is 1.31 in [33.5 mm] for a nominal 1-in [25.4-mm] loop. The flow is accelerated in the loop to prevent any component fallout and reduce volume and time lag. The probe outlet valve is in line with the main stem, enabling any possible obstructions to be cleared.

The flow rate will normally be sized to give a sample inlet velocity between 10% and 300% of the main line velocity per IP 6.2.

The probe is available for fixed or withdrawable mounting in any piping configuration.

- The fixed ByScoop will install directly to a 3-in pipeline stub.
- The withdrawable ByScoop is installed through a 3-in full-bore ball valve. A seal housing may be provided with an optional loop return or purge connection to prevent sediments in the seal area from building up and to allow them to be dispersed prior to retrieval.

Hydraulic extractors are available to allow the withdrawable JISKOOT ByScoop probe to be removed from the pipeline without depressurizing.

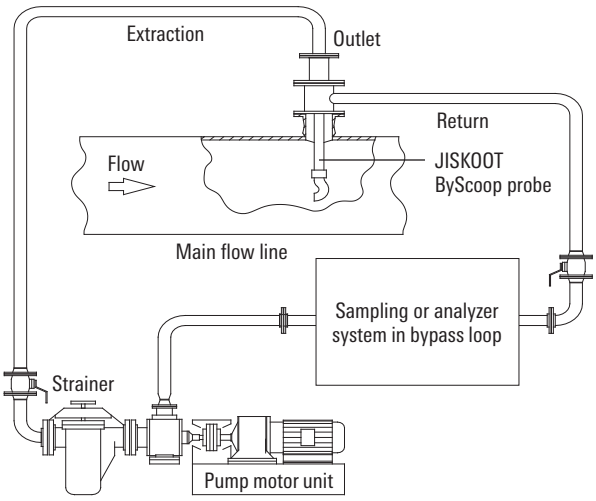

JISKOOT ByScoop probe process diagram.

JISKOOT ByScoop

Technical Specifications			
The following represents a standard design; alternative specifications including NACE MR0175 are available†			
The following equipment is designed in accordance with the requirements of ASME B31.3 and is CE marked (where applicable) to PED 97/23/EC			
		Withdrawable Probe	**Fixed Probe**
Maximum operating pressure		1,450-psi [100-bar] gauge pressure† at 104 degF [40 degC] (standard material of construction)	To suit flange and materials of construction
Support tube		316 stainless steel	ASTM A333 Grade 6 carbon steel
Carrier flange		Carbon steel	–
Mounting flange		–	ASTM A350 LF2 carbon steel
Seal housing		ASTM A350 LF2 carbon steel (316 available†)	–
Probe head		ASTM A351-CF8M stainless steel‡	ASTM A351-CF8M stainless steel‡
Seal		Nitrile-proof cotton and nylon (other options available)	–
Installation	Pipeline mounting flange	3-in NB 150-, 300-, or 600-lbm RF/RTJ	3-in NB 150-, 300-, 600-, 900-, or 1,500-lbm RF (minimum bore size of 2.17 in [55 mm])
	Outlet or exit connection	1½-in NB 150-, 300-, or 600-lbm RF/RTJ standard§	1½-in NB 150, 300-, or 600-lbm RF/RTJ standard§
	Optional return connection	1½-in NB 150-, 300-, or 600-lbm RF/RTJ standard§	–
	Pipeline tapping bore size	2.17-in [55-mm] minimum standard	2.17-in [55-mm] minimum standard
Line temperature		–4 to 100 degF [–20 to 100 degC]	–4 to 100 degF [–20 to 100 degC]
Maximum line pressure	Standard version	720 psi [49.6 bar]	720 psi [49.6 bar]
	High-pressure version	2,160 psi [149 bar]	2,160 psi [149 bar]
Pipeline sizes		8 to 48 in§	8 to 48 in§
Operating standards and CE compliance		ISO 3171, API 8.2, IP 6.2, PED 97/23/EC, Machinery Directive 98/37/EC	ISO 3171, API 8.2, IP 6.2, PED 97/23/EC, Machinery Directive 98/37/EC

† Higher pressure versions available
‡ Available in other materials
§ Other sizes available on request

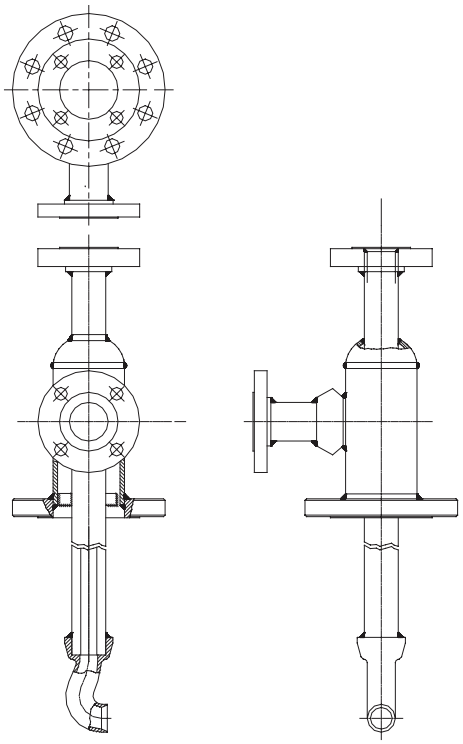

JISKOOT ByScoop sample extraction probe drawing.

products.slb.com/measurement

CAMERON
A Schlumberger Company